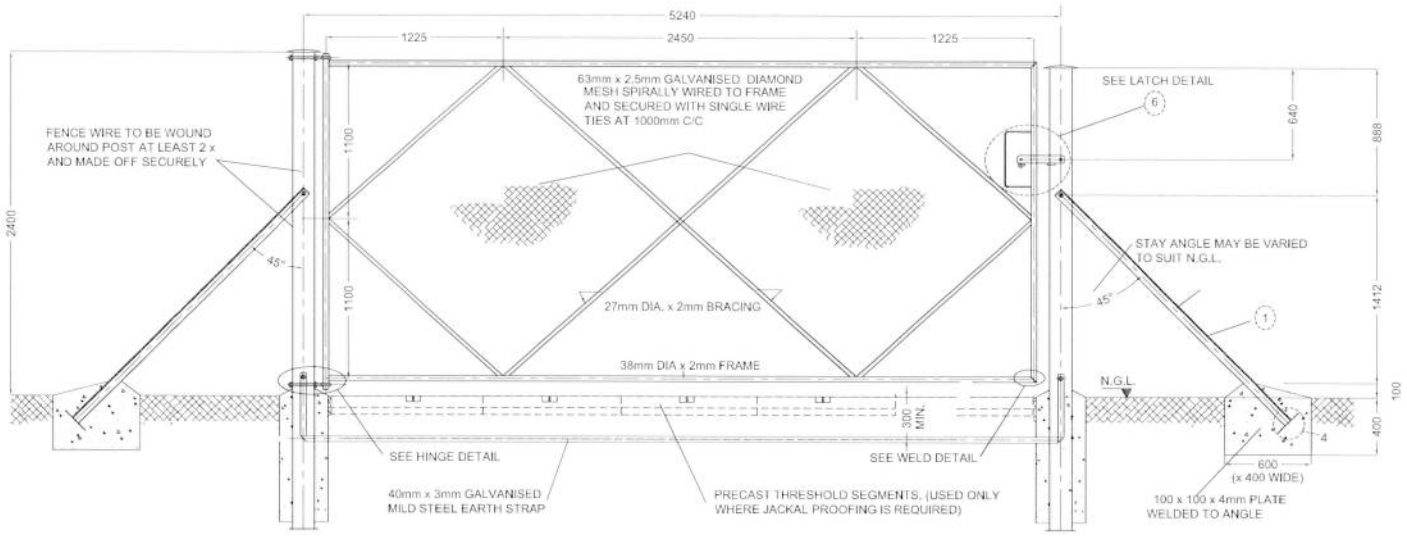

GATE WITH NORMAL / COMPETENT SOIL FOUNDATIONS

SCALE 1:20

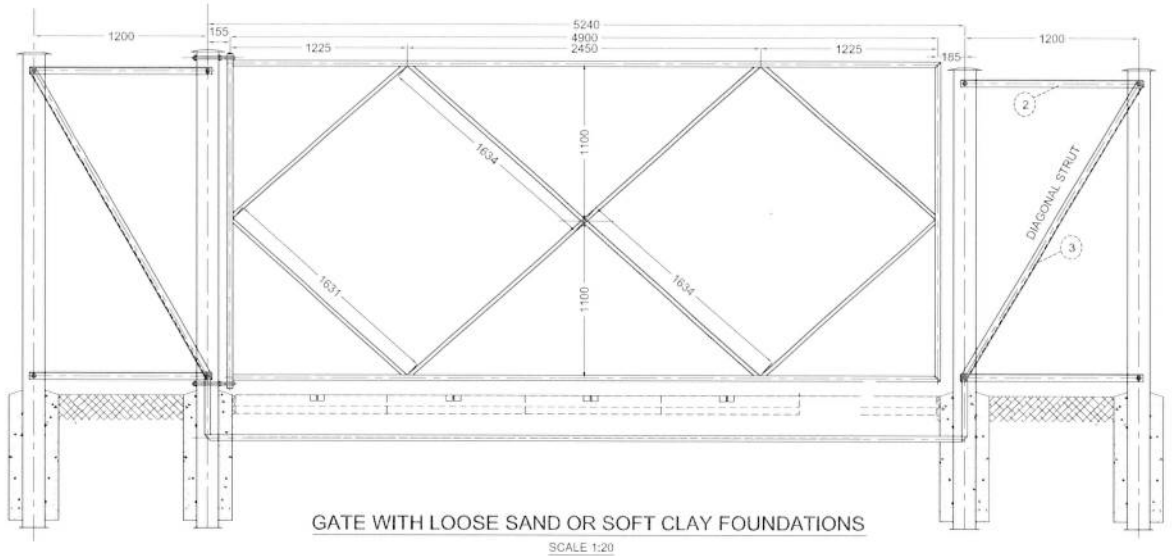

GATE WITH LOOSE SAND OR SOFT CLAY FOUNDATIONS

SCALE 1:20

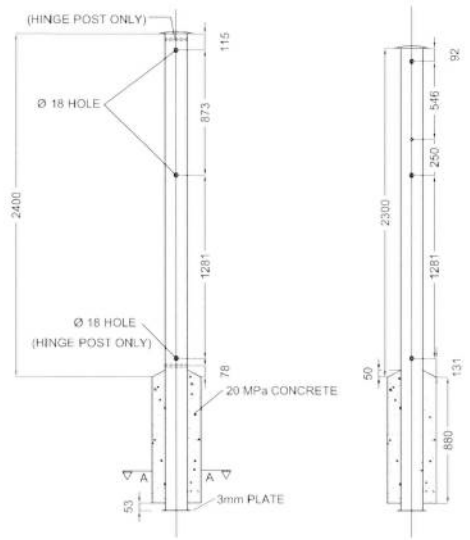

LONG POST (HINGE SIDE) SHORT POST

POST DETAIL

SCALE 1:10

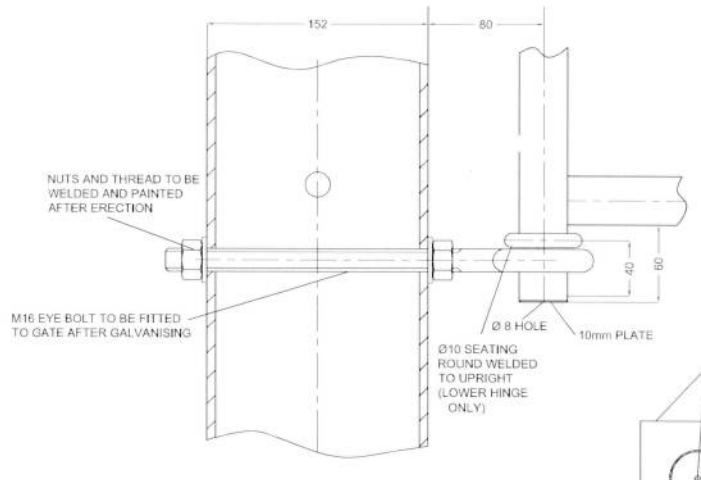

HINGE DETAIL

SCALE 1:10

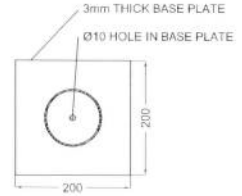

SECTION 4 (BASE PLATE)

SCALE 1:5

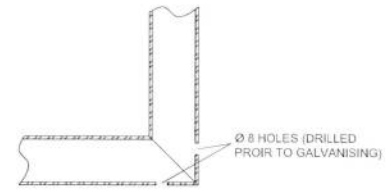

WELD DETAIL FOR ALL FOUR CORNERS

SCALE 1:2

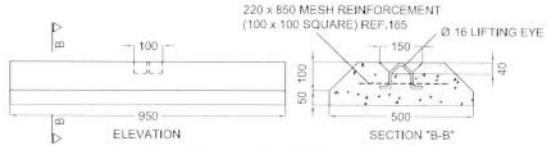

THRESHOLD DETAIL (5 OFF)

SCALE 1:10

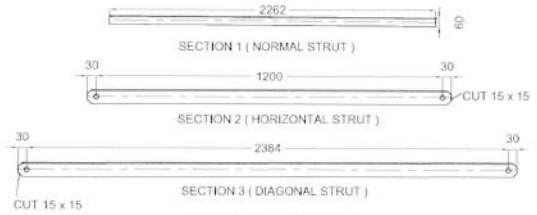

BRACING DETAIL

(FOR SAND / CLAY FOUNDATIONS)

SCALE 1:10

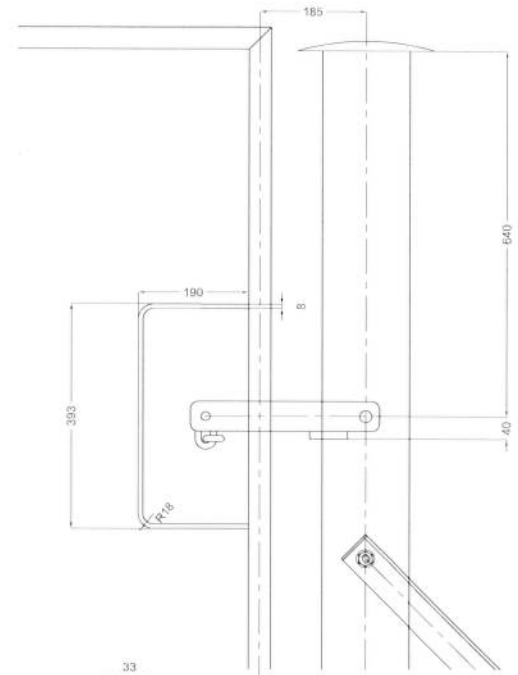

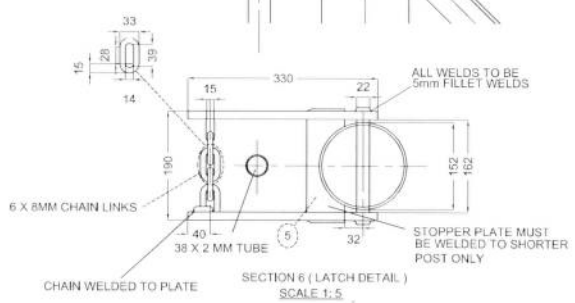

SECTION 6 (LATCH DETAIL)

SCALE 1:5

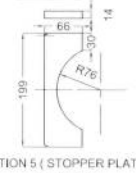

SECTION 5 (STOPPER PLATE)

SCALE 1:5

NOTES:

FOR FABRICATOR:

1. ALL METAL COMPONENTS TO BE GRADE 350Wa , NO SECOND HAND MATERIAL MAY BE USED.
2. ALL METAL COMPONENTS ARE TO BE GALVANISED AFTER MANUFACTURING TO "SANS 121 (ISO 1461)" TO MIN. GALV. THICKNESS OF 85 MICRON.
3. PRIOR TO ASSEMBLY, ALL TUBING SHALL BE CLEANED OF ANY INTERNAL OBSTRUCTIONS BY PASSING A WIRE BRUSH THROUGH EACH TUBE.
4. ALL WELDS TO BE 5mm FILLET WELDS.
5. ALL BENDS ON HINGES AND LATCH COMPONENTS TO BE HOT FORMED.

FOR CONTRACTOR:

6. WHERE CONTINUOUS ROCK OF AT LEAST 500mm IS ENCOUNTERED:
   A) THE SQUARE BASE PLATE MAY BE OMITTED AND HOLES (DIA. 112mm MIN.) MAY BE DRILLED FOR THE POSTS WHICH MUST BE GROUTED IN. (WHERE METAL SURFACES HAVE BEEN EXPOSED DUE TO ON SITE MODIFICATION OF THE POSTS, THESE WILL BE TREATED WITH COLD GALVANISING PAINT).
   B) THE FULL FOUNDING DEPTH OF 1000mm NEED TO BE ACHEIVED.
7. THE USE OF THE JACKAL PROOFING THRESHOLD MUST BE AUTHORISED IN WRITING BY ESKOM.
8. THE USE OF LOOSE SAND / CLAY FOUNDATIONS MUST BE AUTHORISED IN WRITING BY ESKOM.
   THE CONTRACTOR MUST ADVISE ESKOM ON WHERE THESE SOIL CONDITIONS EXIST.

WHERE EXISTING GATES ARE TO BE REPLACED:

THE REPLACEMENT GATE LEAF MAY BE OF EITHER GALVANISED OR "OFF THE SHELF" NON-GALVANISED CONSTRUCTION OR AS INDICATED IN TRMAGABE1 GATES GUIDELINE.

WHERE THE GAP BETWEEN GATE POSTS ARE OF DIFFERENT DIMENSION (FOR EG. FROM PREVIOUS VERSIONS) THE APPROPRIATE GATE LEAF WIDTH MUST BE DETERMINED AND ORDERED ACCORDINGLY.

HOLES FOR "OFF THE SHELF" GATES HAVE BEEN DIMENSIONED ACCORDING TO MOST POPULAR DESIGNS HOWEVER RE-DRILLING OF GATE POSTS MAY BE REQUIRED TO FIT SOME REPLACEMENT GATES.

ALL DRILLING AND CUTTING OF EXISTING GATE POSTS IS TO BE TREATED WITH COLD GALVANISING (ZINC-RICH PAINT).

MATERIAL LIST (FOR COMPETENT SOIL FOUNDATIONS)

DESCRIPTION	No. OFF	MATERIAL
GATE LEAF	1	38 AND 27 DIA. x 2mm GRADE 350Wa TUBING MITRED AND WELDED AS SHOWN
	2	200 x 16mm EYE BOLTS
	4	NUTS
	4	3mm WASHERS
	1	4900 x 2300 GALVANISED DIAMOND MESH (63 x 2,5mm)
		GALVANISED BINDING WIRE
LATCH	1	2 OFF 14 MM FLAT BAR 330MM LONG
	6 LINKS	LONG CHAIN LINK CUT AND WELDED TO FRAME ON ONE SIDE
POSTS	1 OR 2	Ø 152 x 4,5 x 2400 LONG HOLLOW TUBE
	1 OR 2	Ø 152 x 4.5 x 2300 LONG HOLLOW TUBE
	2 OR 4	CAPS WELDED TO POSTS
	2 OR 4	200 x 3mm SQUARE BASE
	4	20 MPa CAST IN SITU FOUNDATIONS AS DETAILED FOR COMPETENT SOIL
STRUTS	2	L: 60x60x6 AS SHOWN
	2	M16 BOLT AND NUT WITH PLAIN WASHERS (GALVANISED)
EARTH STRAP	1	6100 x 40 x 3mm GALVANISED MILD STEEL EARTH STRAP - BOLTED TO POSTS AS SHOWN. NO EARTH WIRE TO BE USED.

	AUTHORISED	DATE	DESCRIPTION OF REVISION	BY	CHKD	SIGNATURE	REFERENCE DRAWINGS
3	P. MARAIS	22/08/2005	REDRAWN IN ACAD WITH MINOR REVISIONS	JAM			
4	B. JACOBS	24/08/2007	REDRAWN IN ACAD WITH MINOR REVISIONS	K.A MOLELE	JAM		

CLIENT: Eskom

TRANS-AFRICA PROJECTS

POWER LINE SERVITUDES.

2.4m HIGH BY 5 m SINGLE LEAF GAME GATE FOR KUDU AND ELAND.

LAYOUT AND DETAILS OF GATE.

DRAWN: K.MOLELE	DATE 24/08/2007	CHECKED JA MEINTJES	DRAWING No. 0.00/10261C	SHEET 1 OF 1	REV 4
PLOT SCALE 1 : 1		APPROVED			

SIZE: A1